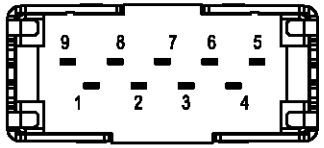


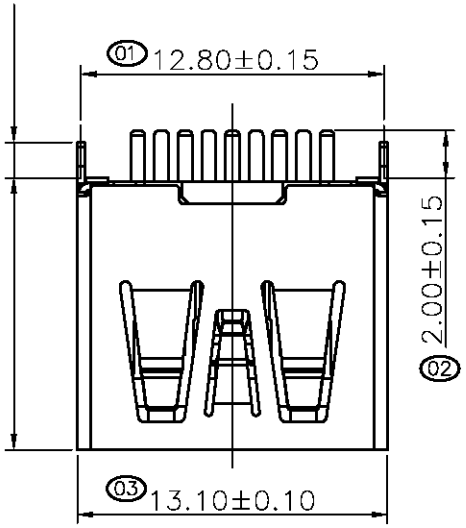


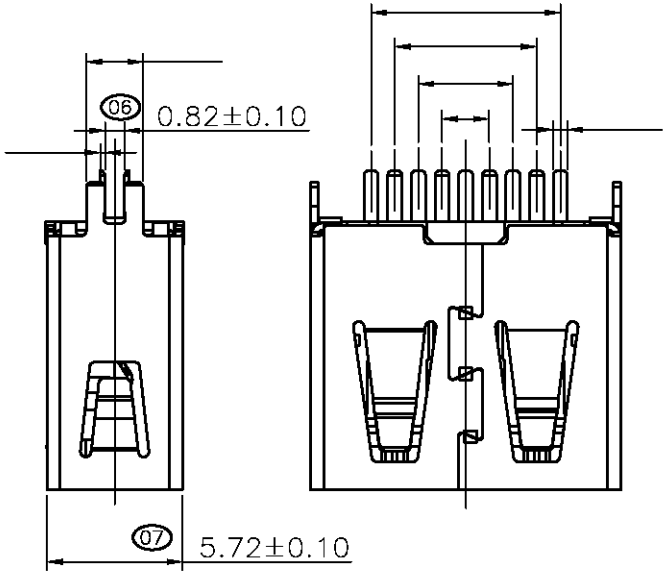


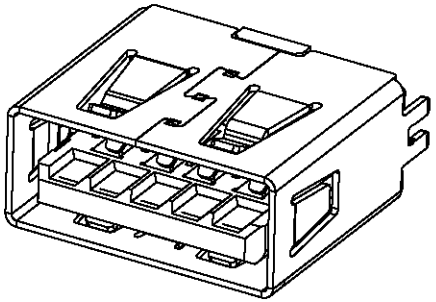

NOTE:

1. MATERIAL:
   - 1.1 INSULATOR:LCP
   - 1.2 CONTACT:COPPER ALLOY
   - 1.3 SHELL:BRASS
2. ELECTRICAL CHARACTERISTICS;
   - 2.1 CONTACTRESISTANCE:30mΩ MAXIMUM
   - 2.2 CONTACT CURRENT RATING:1.5A
   - 2.3 DIELECTRIC WITHSTANDING VOLTAGE:100 V R.M.S.
   - 2.4 INSULATION RESISTANCE 100 MEGOHMS MIN
   - 2.5 OPERATING TEMPEROTURE:-20° C ～ 60° C
3. PLATING
   - 3.1 TERMINAL:
     - 50u″ MIN NICKEL ALL OVER
     - 100u″MIN Tin ON SOLDER AREA
     - (1~30)u″Au ON CONTACT AREA
   - 3.2 SHELL:100u″MIN.NICEL ALL OVER

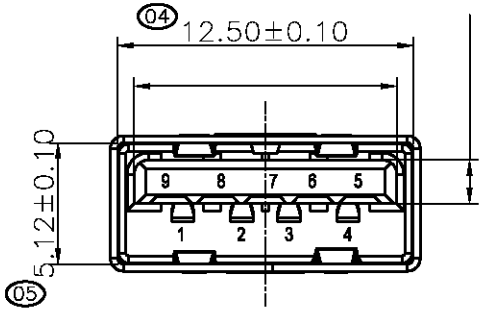


| | | |
|---|---|---|
| 外壳 | C2680 | 镀镍 |
| 端子 | C5191 | 镀金 1u″ |
| 胶芯 | LCP | UL94V-0 |

| | | |
|---|---|---|
| | 更换胶料材质，蓝PA9T更换为蓝LCP | |
| | NEW | |

HE 东莞市旭明电子有限公司

USB 3.0 AF夹板0.82 直端 蓝LCP 铜壳镀镍 针长2.0 无卷边